HYDROPNEU
partner for hydraulics
cylinders - drives - special solutions

Description

- Standard cylinder to ISO 6022, DIN 24333
- Strokes up to 2000 mm
- Piston diameter: 40 – 320 mm
- With/without end position cushioning (with same installation dimensions)
- Two area ratios phi = 1.6 and phi = 2.0
- Construction of all mounting types by screwing-on of components (except trunnion)
- End position cushioning is precisely adjustable
- Generously dimensioned start-up check valves allow a high speed extension with full pressure loading of the effective piston area
- The mounting type, the threaded cylindrical design and generously dimensioned guide lengths at the piston rod and piston allow the application of the cylinders under most severe conditions
- Different seals may be mounted on the piston and on the piston rod

Technical data

- Operating pressure: 250 bar (25 MPa)
- Test pressure: 375 bar (37.5 MPa)
- Hydraulic fluid temperature range: - 20 ... + 80 °C
- Viscosity range: (20 ... 80) 10^{-6} m^2/s
- Piston speed: ≤ 0.5 m/s (higher speeds on request)

Hydraulic fluids:

- Mineral oils, HFC, HFD liquids in combination with seals made of PTFE and fluoric elastomeres
- HFA and HFB liquids on request

Piston rod end

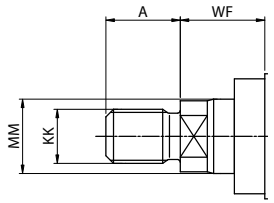

External thread, ref. no. 0
External thread, ref. no. 4

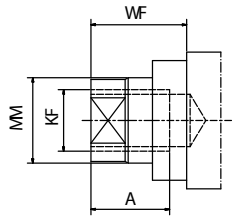

Inside thread, ref. no. 1

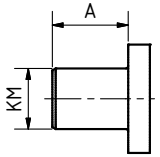

Cylindrical, ref. no. 2

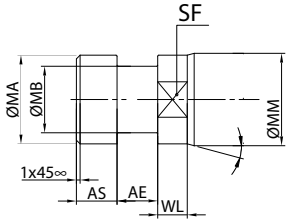

Clutch element, ref. no. 3

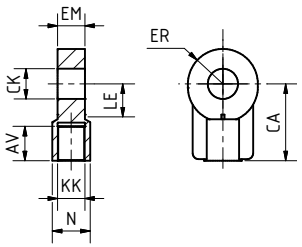

Plain rod eye, ref. no. 5

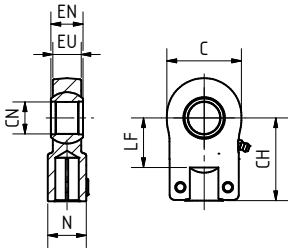

Swivel head, ref. no. 8

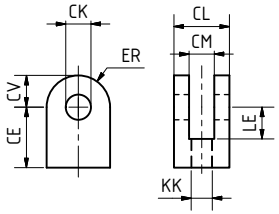

Clevis, ref. no. 9

Special design on request!

HYDROPNEU
partner for hydraulics
cylinders - drives - special solutions

Mounting types

Mounting type: 00
Description: Basic form
ISO-des.: --

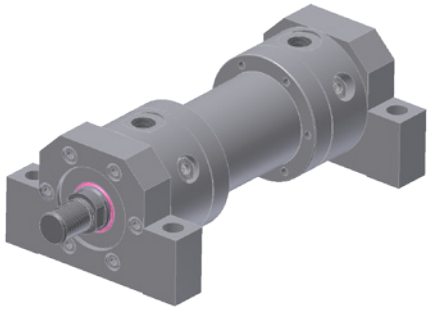

Mounting type: 02
Description: Foot mounting
ISO-des.: MS 2

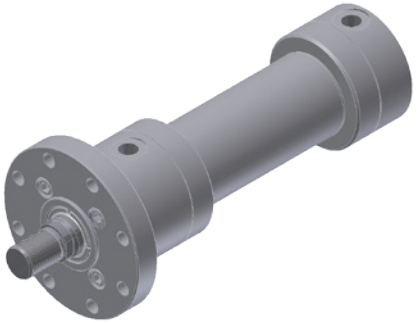

Mounting type: 03
Description: Flange head end
ISO-des.: MF 3

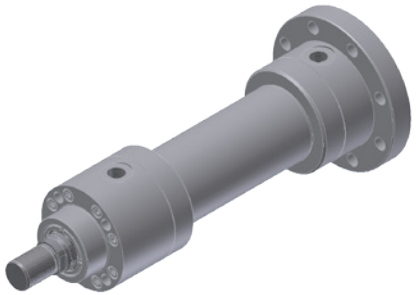

Mounting type: 04
Description: Flange cap end
ISO-des.: MF 4

Mounting type: 05
Description: Rod eye
ISO-des.: MP 3

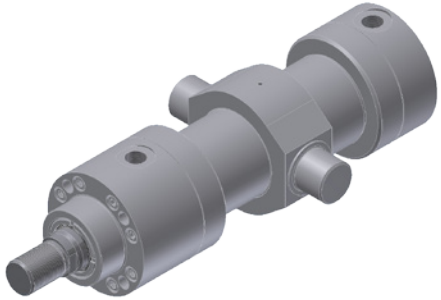

Mounting type: 06
Description: Trunnion
ISO-des.: MT 4

Mounting type: 08
Description: Rod end bearing
ISO-des.: MP 5

Mounting type: 11
Description: Threaded holes head end
ISO-des.: MX 5

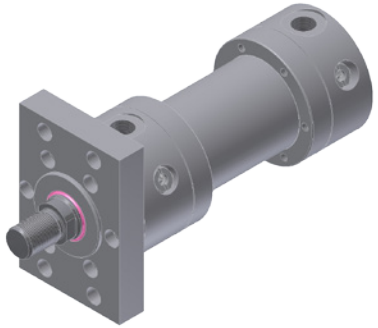

Mounting type: 13
Description: Rectangular flange head end
ISO-des.: MF 1

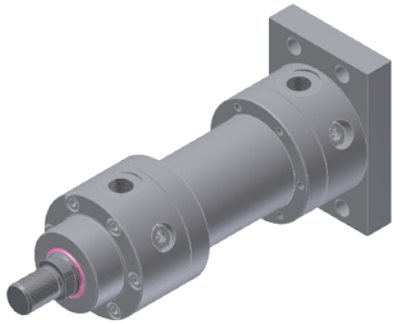

Mounting type: 14
Description: Rectangular flange cap end
ISO-des.: MF 2

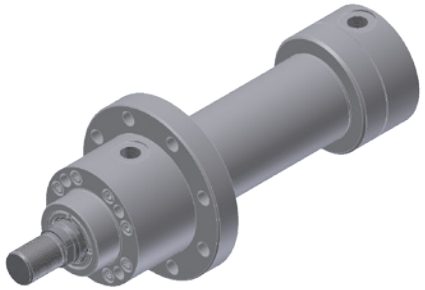

Mounting type: 33
Description: Flange on cylinder
ISO-des.: --

HYDROPNEU
partner for hydraulics
cylinders - drives - special solutions

Mounting types

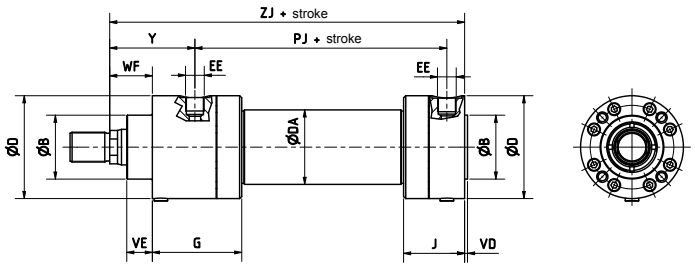

Mounting type 00: Basic form; ISO-des.: --

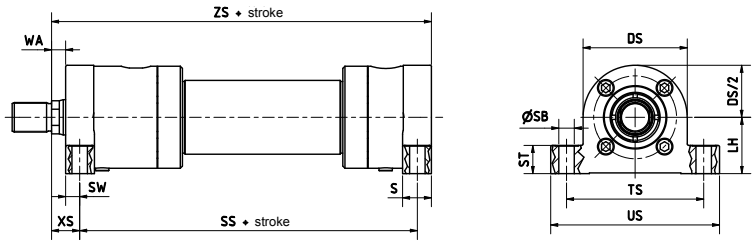

Mounting type 02: Foot mounting; ISO-des.: MS 2

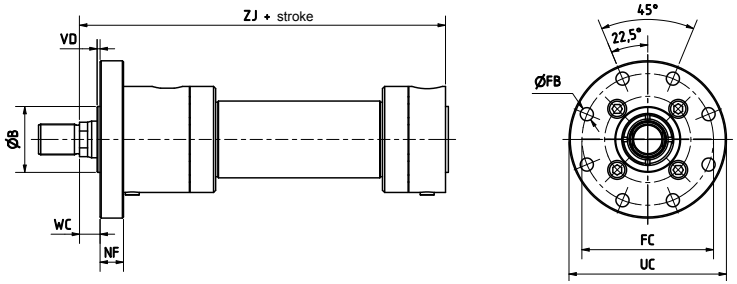

Mounting type 03: Flange head end; ISO-des.: MF 3

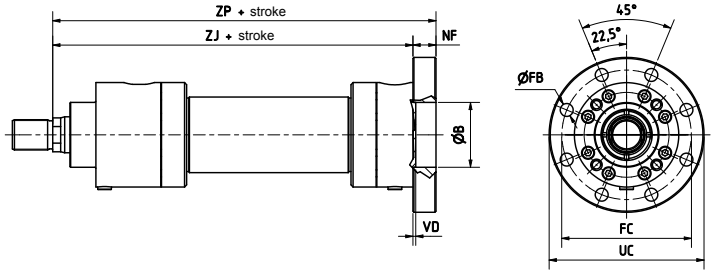

Mounting type 04: Flange cap end; ISO-des.: MF 4

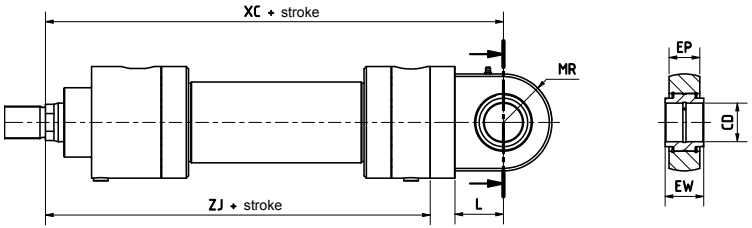

Mounting type 05: Rod eye; ISO-des.: MP 3

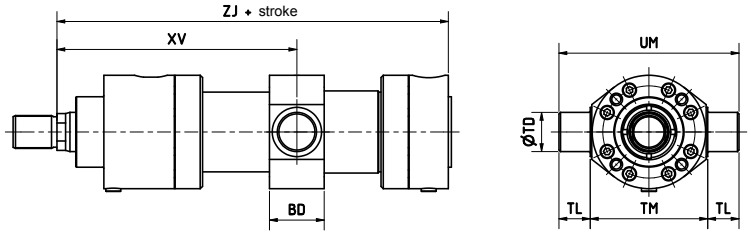

Mounting type 06: Trunnion; ISO-des.: MT 4

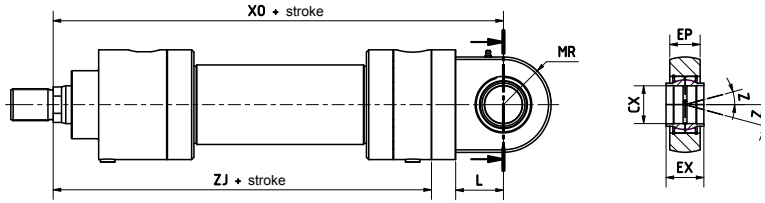

Mounting type 08: Rod end bearing; ISO-des.: MP 5

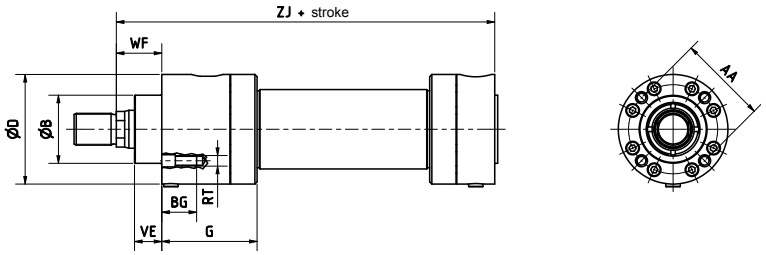

Mounting type 11: Threaded holes head end; ISO-des: MX 5

Mounting types

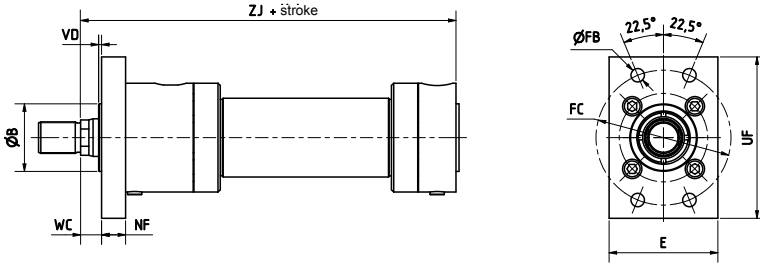

Mounting type 13: Rectangular flange head end; ISO-des: MF 1

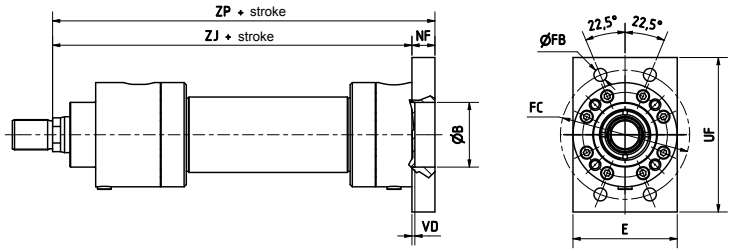

Mounting type 14: Rectangular flange cap end; ISO-des: MF 2

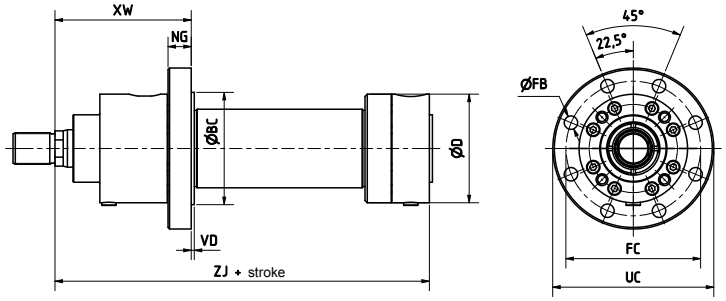

Mounting type 33: Flange on cylinder; ISO-des: --

Position of connections

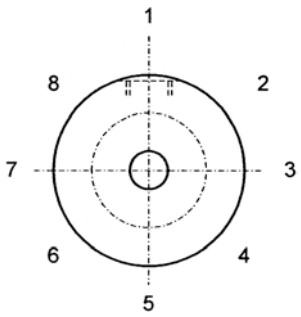

Piston rod view

Connections: Standard position of connections is side 1 for all mounting types. Connections in different positions are available on request.

Cushioning: Standard position of the adjustment screw for cushioning is side 3 for all mounting types. Different positions are available on request.

Air bleed: Standard position of the adjustment screw for air bleed is side 5 for all mounting types. Air bleed screws in different positions are available on request.

If the connections are ordered on a position deviating from side 1, then the position of the adjustment screw for cushioning and the position of the air bleed screw change accordingly. If you wish differing positions, please specify when ordering.

HYDROPNEU
partner for hydraulics
cylinders - drives - special solutions

Piston rod dimensions

Piston Ø	Rod end	Tol.	40		50		63		80		100		125		140		160		180		200		220		250		280		320	
Piston rod Ø MM			25	28	32	36	40	45	50	56	63	70	80	90	90	100	100	110	110	125	125	140	140	160	160	180	180	200	200	220
A (l_2)	0		28		36		45		56		63		85		90		95		106		112		125		125		160		160	
A (l_2)	1		25		32		40		50		63		75		85		100		110		120		125		125		160		160	
C	8		58		71		90		109		136		180		195		210		235		260		310		310		390		390	
CH (l_{21})	8	js13	65		80		97		120		140		180		195		210		235		260		310		310		390		390	
CK	5, 9	H7	25		32		40		50		63		80		90		100		110		125		160		160		200		200	
CN	8	H7	25		32		40		50		63		80		90		100		110		125		160		160		200		200	
EN	8	h12	25		32		40		50		63		80		90		100		110		125		160		160		200		200	
EU	8		22		27		32		40		52		66		70		85		85		100		108		108		138		162	
KF	1		M16x1.5		M20x1.5		M27x2		M33x2		M42x2		M48x2		M56x2		M64x3		M72x3		M80x3		M90x3		M90x3		M100x3		M100x3	
KK (d_2)	0		M20x1.5		M27x2		M33x2		M42x2		M48x2		M64x3		M72x3		M80x3		M90x3		M100x3		M125x4		M125x4		M160x4		M160x4	
LF (l_{27})	8	min	25.5		30		39		47		58		74		85		94		105		116		145		145		190		190	
N	8	max	30		38		47		58		70		90		100		110		125		135		165		165		215		215	
SF	0		22	22	27	30	36	36	41	46	50	60	70	75	75	85	85	90	95	100	110	120	120	140	140	160	160	180	180	200

Rod end = piston rod ends which correspond to dimensions

Cylinder dimensions

Piston Ø	Mt.	Tol.	40		50		63		80		100		125		140		160		180		200		220		250		280		320	
Piston rod Ø MM			25	28	32	36	40	45	50	56	63	70	80	90	90	100	100	110	110	125	125	140	140	160	160	180	180	200	200	220
Annulus area A_1 (cm^2)			12.57		19.64		31.17		50.27		78.54		122.7		153.9		201.1		254		314.2		380.1		490.9		615.8		804.2	
Annulus area A_2 (cm^2)			7.7	6.4	11.6	9.5	18.6	15.3	30.6	25.6	47.4	40.1	72.4	59.1	90.3	75.4	122.6	106.1	159.4	131.7	191.5	160.3	226.2	179	289.8	236.4	361.3	301.6	490	424.1
AA (d_7)	11	±0.2	68		84		98		118		140		170		190		210		250		260									
Ø B (d_{13})	00	H8/f8	50		63		75		90		110		132		145		160		185		200		235		250		295		320	
ØBC	33	f8	90		110		125		150		180		210		240		260		305		320									
BD	06		36		45		56		70		90		110		120		140		150		170		180		180		220		220	
BG	11		31		34		43		46		55		76		100		95		116		121									
CD (d_{20})	05	H9	25		32		40		50		63		80		90		100		110		125		160		160		200		200	
CX (d_{22})	08	H7	25		32		40		50		63		80		90		100		110		125		160		160		200		200	
ØD (d_5)	00	±1.5	88		102		120		145		168		206		235		258		300		306		355		395		445		490	
ØDA (d_4)	00		60		70		83		105		125		155		180		195		229		245		270		325		343		395	
DS	02		88		107		123		148		170		208		235		258		300		310		355		395		445		490	
E	13,14	-1	88		102		120		145		168		206		235		258		300		306		355		395		445		490	
EE (Whitworth pipe thread) (d3)	00		G 1/2"		G 1/2"		G 3/4"		G 3/4"		G 1"		G 1"		G 1 1/4"		G 1 1/4"		G 1 1/4"		G 1 1/4"		G 1 1/2"		G 1 1/2"		G 1 1/2"		G 1 1/2"	
EP (b_8)	05,08		22		27		32		40		52		66		70		85		85		100		108		108		138		162	
EW (b_4)	05	h12	25		32		40		50		63		80		90		100		110		125		160		160		200		200	
EX (b_7)	08	h12	25		32		40		50		63		80		90		100		110		125		160		160		200		200	
Ø FB (d_{16})	03,04,33	H13	11		14		14		18		22		22		26		26		33		33		39		39		45		45	
FC (d_{15})	03,04,33	js13	125		132		150		180		212		250		285		315		355		385		435		475		555		600	
G	00	+2	80		104		117		125		138		178		190		215		235		263				282					
J	00		66		71		83		89		102		120		122		137		147		163									

Mt. = mounting types which correspond to dimensions

HYDROPNEU
partner for hydraulics
cylinders - drives - special solutions

Cylinder dimensions

Piston Ø	Mt.	Tol.	40		50		63		80		100		125		140		160		180		200		220		250		280		320	
Piston rod Ø MM			25	28	32	36	40	45	50	56	63	70	80	90	90	100	100	110	110	125	125	140	140	160	160	180	180	200	200	220
Annulus area A_1 (cm^2)			12.57		19.64		31.17		50.27		78.54		122.7		153.9		201.1		254		314.2		380.1		490.9		615.8		804.2	
Annulus area A_2 (cm^2)			7.7	6.4	11.6	9.5	18.6	15.3	30.6	25.6	47.4	40.1	72.4	59.1	90.3	75.4	122.6	106.1	159.4	131.7	191.5	160.3	226.2	179	289.8	236.4	361.3	301.6	490	424.1
L	05,08		32		40		50		63		71		90		113		112		135		160		200		200		250		250	
LH	02	h10	45		56		63		80		90		110		115		132		150		160		185		205		235		255	
MR	05,08		32		40		50		63		71		90		102		112		135		160		170		170		220		220	
NF (h_2)	03,04	js13	20		25		28		32		36		40		40		45		50		56		63		63		80		80	
NG	33		22		24		28		31		35		45		45		55		60		65		67		67		77		77	
PJ + stroke	00	±1.25	106		120		133		155		171		205		223		235		256		278		326		316		375		391	
RT	11		M 8		M 10		M 12		M 14		M 16		M 20		M 24		M 24		M 27		M 30									
S	02		27		34		37		41		48		50		50		55		60		70		80		80		97		97	
Ø SB	02	H13	14		16		18		22		22		26		30		30		39		39		45		52		52		62	
SS + stroke	02	±1.25	195		228		255		282		221		268		301		324		347		369		434		447		510		518	
ST	02		25		32		36		40		45		56		60		60		70		70		90		100		100		120	
SW	02		13		16.5		18		20		23		23		24		25.5		29		35		40		40		48		48	
Ø TD (d_{21})	06	f8	25		32		40		50		63		80		90		100		110		125		160		160		200		200	
TL	06	js13	20		25		32		40		50		63		70		80		90		100		125		125		160		160	
TM (l_{17})	06	h14	90		112		125		150		180		224		265		280		320		335		385		425		480		530	
TS	02	js13	120		140		160		195		220		260		280		310		360		380		430		480		540		590	
UC (d_{14})	03,04,33	-1	150		160		175		215		250		290		330		360		410		450		500		540		630		675	
UF (l_7)	13,14	-1	150		160		175		215		250		290		330		360		410		450		500		540		630		675	
UM	06		130		162		189		230		280		350		405		440		500		535		635		675		800		850	
US	02		145		170		195		240		260		310		330		360		430		450		500		570		630		690	
VD (l_{11})	00		3		4		4		4		5		5		5		5		5		5		8		8		8		8	
VE (l_3)	00	max	23		29		32		36		41		45		45		50		55		61		71		71		88		88	
WA (l_6)	02	±2	10		12		15		18		18		24		24		28		33		29		31		31		37		37	
WC (l_{22})	03	±2	18		22		25		28		32		36		36		40		45		45		50		50		56		56	
WF	00	±2	38		47		53		60		68		76		76		85		95		101		113		113		136		136	
XC+stroke (L_5+stroke)	05	±1.25	257		305		348		395		442		520		580		617		690		756		890		903		1072		1080	
XO + stroke	08	±1.25	257		305		348		395		442		520		580		617		690		756		890		903		1072		1080	
XS	02	±2	23		28.5		33		38		41		47		48		53.5		62		64		71		71		85		85	
XV min ($L_{6,min}$)	06		145		185		210		230		260		320		350		380		430		460		507		525		598		600	
XW	33	±3	116		148		167		182		202		250		262		296		326		360				388					
Y	00	±2	79		98		112		120		134		153		166		185		204		220		244		257		290		282	
Z	08		4		4		4		4		4		4		4		4		4		4		4		4		4		4	
ZJ+stroke (L_0+stroke)	00	±1.5	205		240		270		300		335		390		425		460		500		540		627		640		742		750	
ZP+stroke (L_4+stroke)	04	±1.5	225		265		298		332		371		430		465		505		550		596		690		703		822		830	
ZS + stroke	02		231		273		306		340		285		338		373		403		438		468		545		558		643		651	
Cushioning path	00		25		25		28		34		38		42		47		47		52		52		70		70		90		90	
min. stroke Mt.06 ISO MT4	06		25		45		50		60		80		110		110		130		150		180		200		210		240		245	

Mt. = mounting types which correspond to dimensions

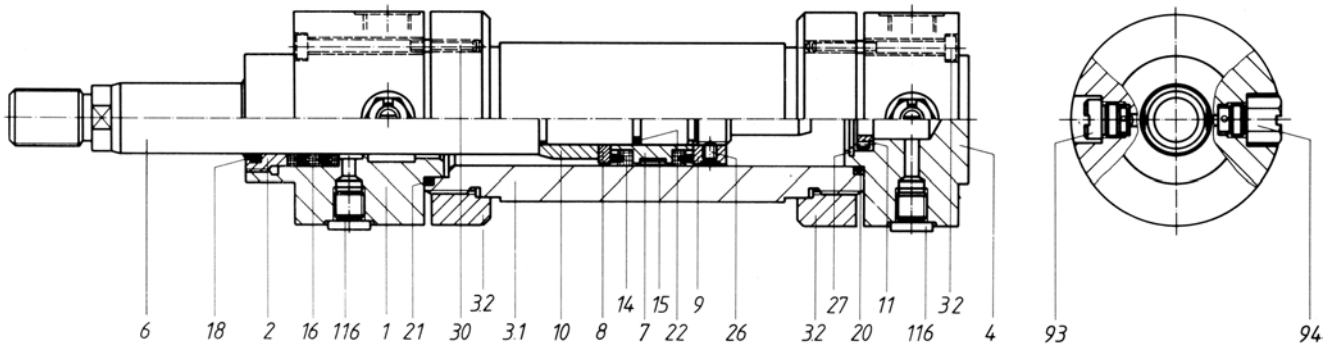

Spare parts					
Piston rod and piston complete with seals consisting of:			**Seal kit consisting of:**		
Pos.	**Unit**	**Description**	**Pos.**	**Unit**	**Description**
6	1	Piston rod	14	*	Piston seal
7	1	Piston	15	*	Piston guide ring
14	*	Piston seal	16	*	Rod seal
15	*	Piston guide ring	18	1	Scraper ring
22	1	O-ring	20	1	O-ring
			21	1	O-ring
			22	1	O-ring

Other components (also available on request)					
Pos.	**Unit**	**Description**	**Pos.**	**Unit**	**Description**
1	1	Cylinder head	11	*	Damping ring
2	1	Bushing	26	1	Grub screw
3.1	1	Cylinder tube	27	*	Locking ring
3.2	2	Ring	30	8	Head cap screw
4	1	Cylinder cover	32	8	Head cap screw
8	*	Piston washer	93	*	Check valve
9	*	Nut	94	*	Damping cartridge
10	*	Damper piston	116	2	Air bleed screw

*Number of units depends on design

Calculation of buckling strength

Proceeding:

1. Determine the necessary length La of the piston rod (including stroke).
2. Define the effective buckling length S_{kv} with the help of the table.
3. Identify the allowable buckling length $S_{K,zul.}$ using the diagram.
4. The effective buckling length must be less than or equal to the allowable buckling length.

$$S_{kv} \leq S_{k,zul.}$$

Effective buckling length S_{kv}

Type of fixing	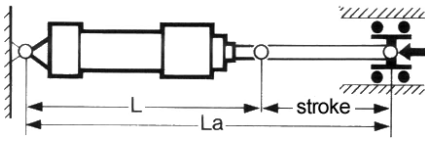	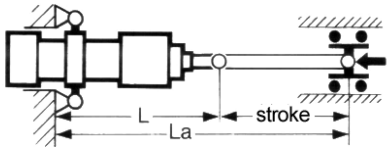	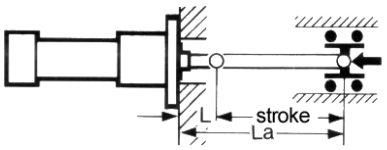
Mounting type	05, 08	06	02, 03, 11, 13, 33
Effective buckling length	$S_{kv}=L_a$	$S_{kv}=L_a$	$S_{kv}=0.7\ L_a$

Type of fixing	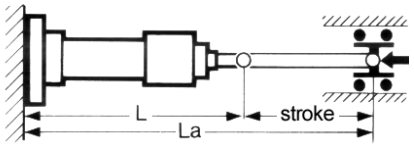	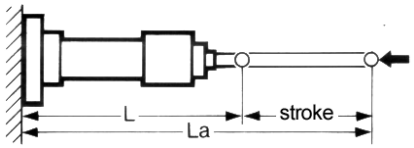	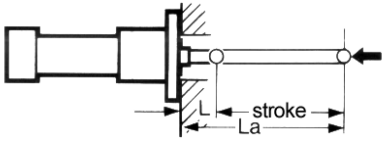
Mounting type	04, 14	04, 14	02, 03, 11, 13, 33
Effective buckling length	$S_{kv}=0.7\ L_a$	$S_{kv}=2\ L_a$	$S_{kv}=2\ L_a$

Buckling

Allowable buckling length $s_{k,zul.}$

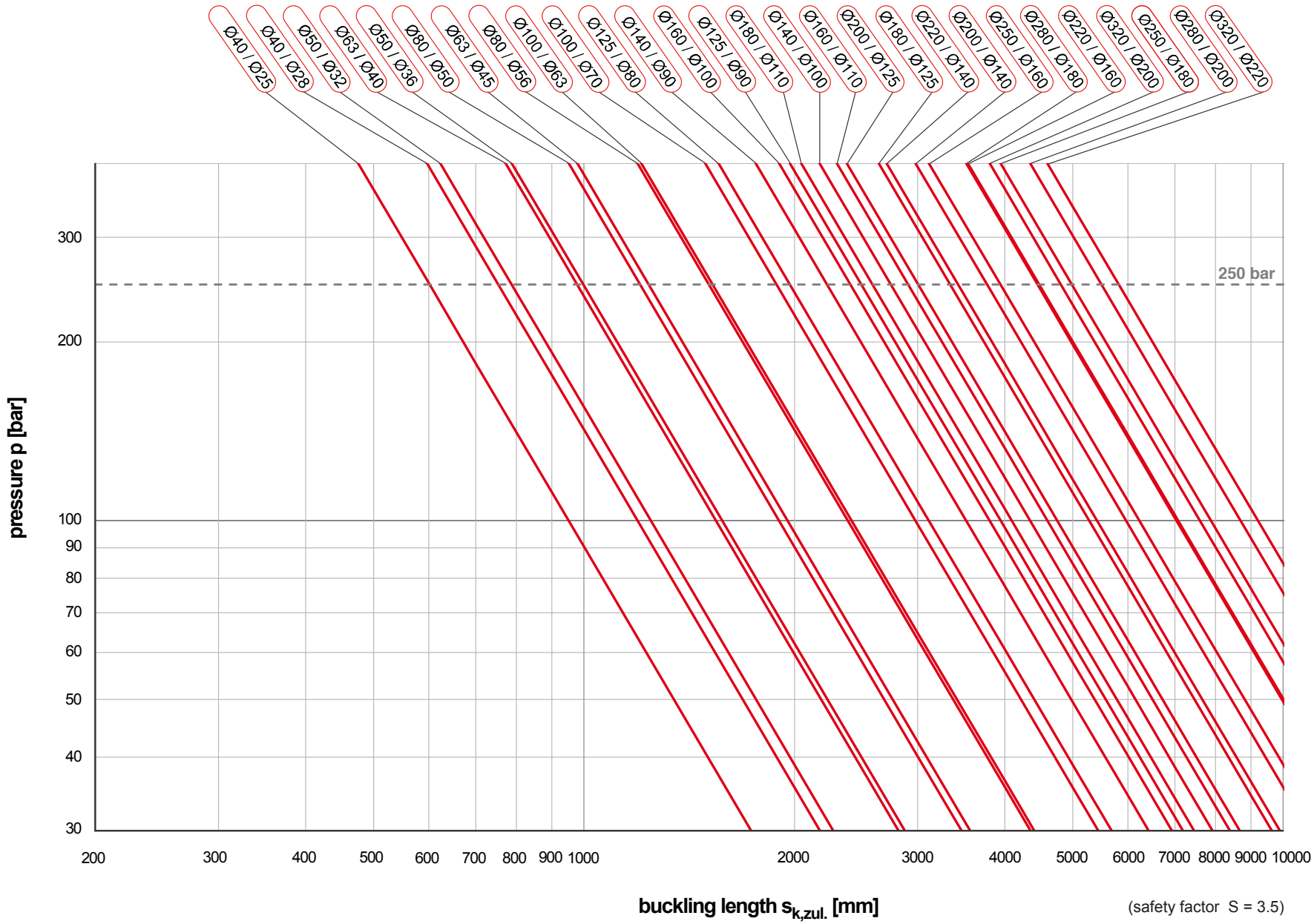

(safety factor S = 3.5)

Datasheet Type 46 · Single rod cylinder according to ISO 6022 / DIN 24333

HYDROPNEU
partner for hydraulics
cylinders - drives - special solutions

Ordering Code Standard Cylinders / Standard Cylinders DIN/ISO

																				in case of deviation from standard only								for cylinders with proximity switch only						
Classification / order number	TYP	.	KST	KSTH	KSTV	.	BEA	.	BAA	.	DAE	-	DKO	-	MM	-	HUB	-	KDI	.	KSDI	.	EE	-	EEV	EEH	-	DAEV	DAEH	-	ELV	ELH	-	S	SZA	-	SVO	SHI
Example	51	.	0	0	8	.	02	.	2	.	1	-	050	-	022	-	0350	-	5	.	0	.	0	-	1	1	-	2	0	-	0	0	-	N	0	-	3	3

Abbr.	Characteristics	Types of cylinders								
TYP	**Type of cylinder**	**41**	**44**	**46**	**47**	**48**	**51**	**53**	**55**	**57**

Abbr.	Characteristics	41	44	46	47	48	51	53	55	57
KST	**Piston rod**									
0	single	X	X	X	X	X	X	X	X	X
1	on both sides (double rod cylinder)	X					X		X	
2	on both sides, small rear rod						X		X	
3	on both sides, large rear rod						X		X	
4	on both sides, medium rear rod						X		X	
KSTH	**Piston rod end, rear**									
0	external thread	X	X	X	X	X	X		X	
1	internal thread	X					X		X	
2	cylindrical	X								
4	external thread ISO 4395						X		X	
5	plain rod eye	X								
8	swivel head (Type 51, 55: DIN 24555)	X					X		X	
KSTV	**Piston rod end, front**									
0	external thread	X	X	X	X	X	X	X	X	X
1	internal thread	X	X	X	X	X	X	X	X	X
2	cylindrical	X	X	X	X	X	X	X	X	X
3	coupling	X	X	X	X	X	X	X	X	X
4	external thread ISO 4395	X	X	X	X	X	X	X	X	X
5	plain rod eye	X	X	X	X	X	X	X	X	X
8	swivel head (Type 51, 55: DIN 24555)	X	X	X	X	X	X	X	X	X
9	clevis	X	X	X	X	X	X	X	X	X

Abbr.	Characteristics	ISO-des.	41	44	46	47	48	51	53	55	57
BEA	**Mounting type**										
00	basic form		X		X	X	X	X	X	X	
01	threaded flange head end		X								
	threaded holes head end	MX5						X	X	X	
02	foot mounting	MS2	X	X	X	X	X	X	X	X	X
03	flange head end	MF3	X	X	X	X	X				
04	flange cap end	MF4	X	X	X	X	X				
05	rod eye	MP3	X	X	X	X	X	X	X	X	
06	trunnion	MT4	X		X	X	X	X	X	X	
08	rod end bearing	MP5	X		X	X	X	X	X	X	
11	threaded holes head end	MX5			X	X	X				X
	tie rods elongated head end	MX3						X	X	X	
12	threaded holes cap end										X
	tie rods elongated cap end	MX2						X	X	X	
13	rectangular flange head end [1), 3)]	MF1/ME5			X	X	X	X	X	X	X
14	rectangular flange cap end [2), 3)]	MF2/ME6			X	X	X	X	X	X	X
15	clevis mounting	MP1						X	X	X	
16	trunnion on the head	MT1						X	X	X	
19	tie rods elongated both ends	MX1						X	X	X	
22	foot mounting with fit-in key	MS2						X	X	X	X
23	rectangular flange head end (wide)							X	X	X	
26	trunnion on the bottom	MT2						X	X	X	
33	flange on cylinder		X		X	X	X				
43	longitudional bores, sinks on both sides										X

Abbr.	Characteristics	41	44	46	47	48	51	53	55	57
BAA	**Type of construction**									
2	double-acting	X	X	X	X	X	X	X	X	X
3+4	single-acting (3=pushing; 4=pulling)	X	X	X	X	X	X	X	X	X
5+6	single-acting with spring (5=pushing; 6=pulling)	X		X	X	X	X			X

Abbr.	Characteristics	41	44	46	47	48	51	53	55	57
DAE	**Cushioning**									
0	without cushioning	X	X	X	X	X	X	X	X	X
1	cushioning in the front	X	X	X	X	X	X	X	X	
2	cushioning in the head	X	X	X	X	X	X	X	X	
3	cushioning on both sides	X	X	X	X	X	X	X	X	
DKO	**Piston diameter**									
	see measuring index									
MM	**Piston rod diameter**									
	see measuring index									
HUB	**Stroke**									
	consider buckling									
KDI	**Piston seal**									
0	NBR lip seals / PUR lip seals	X s	X	X	X	X	X	X	X	
2	PUR lip seal / Viton®	X	X							
3	piston ring / casting		X s							
5*	sleeve ring/o-ring; tefl./NBR	X (S)	X	X s	X s	X s	X s	X	X s	X s
6	sleeve ring/o-ring;tefl./Viton®	X	X	X	X	X	X	X	X	X
7	compact seal / NBR	X		X	X	X	X	X s	X	
KSDI	**Piston rod seal**									
0	NBR lip seals / PUR lip seals	X s		X	X s	X s	X s	X s	X s	
1	PUR lip seal, u-seal				X	X	X	X	X	X s
2	lip seal / Viton®	X			X	X	X	X	X	X
3	chevron ring NBR		X s	X s						
4	chevron ring Viton®		X	X						
5	stepseal/o-ring; tefl./NBR			X	X	X	X	X	X	
6	stepseal/o-ring;tefl./Viton®			X	X	X	X	X	X	
9	PUR lip seal, u-seal+scraper Viton®				X		X	X		X
EE	**Hydraulic connections**									
0	pipe thread (DIN/ISO 228)	X s	X s	X s	X s	X s	X s	X s	X s	X s
1	metrical ISO thread	X		X	X	X	X	X	X	
2	UNF thread	X		X	X	X	X	X	X	
3	flange connection			X	X	X	X	X	X	
EEV	**Hydr. connection, front position**									
1	0 degrees (at top)	X s	X s	X s	X s	X s	X s	X s	X s	X
2	45 / 60 degrees (clockwise)			X	X	X				
2 / 3	90 degrees (clockwise)			3	3	3	2	2	2	X
4	135 degrees (clockwise)			X	X	X				
3 / 5	180 degrees (clockwise)			5	5	5	3	3	3	
6	225 degrees (clockwise)			X	X	X				
4 / 7	270 degrees (clockwise)			7	7	7	4	4	4	
8	315 degrees (clockwise)			X	X	X				

[1)] MF 1 for 44, 46, 47, 48; ME 5 for 51, 53, 55
[2)] MF 2 for 44, 46, 47, 48; ME 6 for 51, 53, 55
[3)] mounting type 13 (14) for type 57: longitudinal bores, sinks on rear (front)
* type 41: standard for piston diameter = 12, 15, 20
s = standard design
(S) = standard design, not for all forms of construction
RC = rear center

Abbr.	Characteristics	41	44	46	47	48	51	53	55	57
EEH	**Hydr. Connection, rear position**									
1	0 degrees (at top)	RC		X s	X s	X s	X s	X s	X s	X
2	45 / 60 degrees (clockwise)			X	X	X				
2 / 3	90 degrees (clockwise)			3	3	3	2	2	2	X
4	135 degrees (clockwise)			X	X	X				
3 / 5	180 degrees (clockwise)			5	5	5	3	3	3	
6	225 degrees (clockwise)			X	X	X				
4 / 7	270 degrees (clockwise)			7	7	7	4	4	4	
8	315 degrees (clockwise)			X	X	X				
DAEV	**Cushioning, front position**									
0	without cushioning	X		X	X	X	X	X	X	
1	0 degrees (at top)			X	X	X	X	X	X	
2	45 / 60 degrees (clockwise)	X		X	X	X				
2 / 3	90 degrees (clockwise)	X s		3 s	3 s	3 s	2 s	2 (S)	2 s	
4	135 degrees (clockwise)			X	X	X				
3 / 5	180 degrees (clockwise)	X		5	5	5	3	3 s	3	
6	225 degrees (clockwise)			X	X	X				
4 / 7	270 degrees (clockwise)	X		7	7	7	4	4	4	
8	315 degrees (clockwise)			X	X	X				
DAEH	**Cushioning, rear position**									
0	without cushioning	X		X	X	X	X	X	X	
1	0 degrees (at top)			X	X	X	X	X	X	
2	45 / 60 degrees (clockwise)	X		X	X	X				
2 / 3	90 degrees (CW; 51/55: Bf. 02->S)	X s		3 s	3 s	3 s	2 (S)	2 (S)	2 (S)	
4	135 degrees (clockwise)			X	X	X				
3 / 5	180 degrees (clockwise)	X		5	5	5	3 s	3 s	3 s	
6	225 degrees (clockwise)			X	X	X				
4 / 7	270 degrees (clockwise)	X		7	7	7	4	4	4	
8	315 degrees (clockwise)			X	X	X				
ELV	**Air bleed, front position**									
0	without air bleed	X	X							X
1 - 8	see cushioning position	X	X	X	X	X	X	X	X	X
ELH	**Air bleed, rear position**									
0	without air bleed	X	X							X
1 - 8	see cushioning position	X	X	X	X	X	X	X	X	X
S	**Position detection**									
Z	attached proximity switches								X	
N	built-in proximity switches	X	X	X	X	X	X	X		X
SZA	**Number of switches**									
1 - 9	for S = Z								X	
1 - 2	for S = N	X	X	X	X	X	X	X		X
SVO	**Switch, front position**									
0	without switch	X	X	X	X	X	X	X	X	X
1 - 8	see cushioning position	X	X	X	X	X	X	X	X	X
SHI	**Switch, rear position**									
0	without switch	X	X	X	X	X	X	X	X	X
1 - 8	see cushioning position	X	X	X	X	X	X	X	X	X